FOOD SERVICE EQUIPMENT SCHEDULE

ITEM	QUANTITY	DESCRIPTION	EQUIPMENT CLASS	SIZE (MILLIMETERS, APPROXIMATE) X	Y	Z	ELECTRICAL VOLTS	PHASE	NON-MOTOR KW	TOTAL AMPS	MOTOR KW	CONN	PLUG TYPE	PLUMBING HW 45 C	HW 60 C	CW	WASTE	ID WASTE	GAS	KW	COMMENTS
1	1	RECEIVING SCALE ON MOBILE STAND	C	483	803	1600	–	–	–	–	–	–		–	–	–	–	–	–	–	(A-1), (A-12)
2	1	RECEIVING DESK	C	1524	762	749	–	–	–	–	–	–		–	–	–	–	–	–	–	
3	1	SHELVING	C	914	610	2050	–	–	–	–	–	–		–	–	–	–	–	–	–	(A-12)
4	2	HAND TRUCK	C	762	1524	356	–	–	–	–	–	–		–	–	–	–	–	–	–	(A-12)
5	17	SHELVING	C	1220	610	2050	–	–	–	–	–	–		–	–	–	–	–	–	–	(A-2), (A-12)
6	1	FREEZER COND. UNIT	A	660	972	618	208	3	–	11.5	2.2	H		–	–	–	–	–	–	–	(A-3)
6a	1	FREEZER EVAPORATOR UNIT (COOLER)	A	1835	352	375	208	1	2.76	16	0.09	H		–	–	–	–	–	–	–	(E-1)
7	3	REFG. COND. UNIT	A	615	764	505	208	3	–	4	0.75	H		–	–	–	–	–	–	–	(A-3)
7a	3	REFG. EVAPORATOR UNIT (COOLER)	A	1124	352	375	120	1	–	3.6	0.08	H		–	–	–	–	–	–	–	
8	4	DOORWAY CLOSURE	A	1184	–	2438	–	–	–	–	–	–		–	–	–	–	–	–	–	(A-4)
9	1	FAUCET HOSE STATION	A	–	–	–	–	–	–	–	–	H		–	20	20	–	–	–	–	(M-1), (M-2), (M-3)
10a	1	FREEZER	A	SEE AD		3048	120	1	1.0	6.3	–	H		–	–	–	–	–	–	–	(A-13), (E-2)
10b	1	REFRIGERATOR – DAIRY	A	SEE AD		3048	120	1	0.6	6.67	–	H		–	–	–	–	–	–	–	(A-13), (E-3)
10c	1	REFRIGERATOR – VEGETABLE	A	SEE AD		3048	120	1	0.8	6.67	–	H		–	–	–	–	–	–	–	(A-13), (E-3)
10d	1	REFRIGERATOR – VEGETABLE	A	SEE AD		3048	120	1	0.6	6.67	–	H		–	–	–	–	–	–	–	(A-13), (E-3)
11	1	AIR CURTAIN	A	1829	324	375	120	1	–	10.2	–	H		–	–	–	–	–	–	–	(M-4)
11a	3	AIR CURTAIN	A	1829	324	375	120	1	–	10.2	–	H		–	–	–	–	–	–	–	(M-4)
11b		NOT USED	A	914	324	375	–	–	–	–	–	–		–	–	–	–	–	–	–	(M-4)
12	2	FLOOR TRHOUGH W/GRATE	A	Varies	305	102	–	–	–	–	–	–							–		
12a	2	CAN RACKS	C	721	1080	2197	–	–	–	–	–	–		–	–	–	–	–	–	–	
13	2	CART	A	915	610	305	–	–	–	–	–	–		–	–	–	–	–	–	–	
14	1	SINK, VEGETABLE PREP	A	4826	762	914	–	–	–	–	–	–		15	–	15	50	50	–	–	(A-5), (M-6), (M-7)
15	2	WASTE PULPING DISPOSER	A	1117	457	864	208	3	–	35	–	H		–	–	20	–	80	–	–	(M-8), (M-9), (E-4)
16	1	REFRIGERATOR, ROLL – THRU	A	902	994	2121	120	1	–	9.8	–	P	NEMA 5-15P	–	–	–	–	–	–	–	
17	5	TABLE	C	1219	762	864	–	–	–	–	–	–		–	–	–	–	–	–	–	(A-12)
18	1	TABLE, /EQUIPMENT STAND	C	914	762	864	–	–	–	–	–	–		–	–	–	–	–	–	–	(A-12)
19	3	TABLE, /EQUIPMENT STAND, MOBILE	C	610	762	610	–	–	–	–	–	–		–	–	–	–	–	–	–	(A-12)
20	24	STORAGE SHELVING SYSTEM	A	SEE COMMENT LIST			–	–	–	–	–	–		–	–	–	–	–	–	–	(A-6)
21	3	TABLE W/ SINK	A	1829	762	902	–	–	–	–	–	–		15	–	15	–	50	–	–	(A-5)
22	2	MEAT SLICING MACHINE	C	572	667	654	120	1	–	9.8	–	P	NEMA 5-15P	–	–	–	–	–	–	–	
23	1	VEGTBL PEELING MACHNE (27.2 K.)	A	702	687	1580	208	1&3	–	4.1&4.2	–	H		–	–	15	–	50	–	–	(E-5)
24	1	WASTE PULPER W/ THROUGH CONN.	A	1350	785	1092	208	3	–	38	–	H		–	–	15	–	80	–	–	(M-8), (E-4)
25	1	FOOD CUTTER	C	810	606	384	120	1	–	9.8	–	P	NEMA 5-15P	–	–	–	–	–	–	–	
26	3	RACK, UTENSIL	A	1219	559	2134	–	–	–	–	–	–		–	–	–	–	–	–	–	
27	1	RANGE, (4) BURNER	A	610	810	1511	208	3	–	66	–	H		–	–	–	–	–	–	17.6	(A-11), (M-10)
28	2	PAN, FRYING & BRAISING (181.2 L)	A	1219	839	1861	208	3	–	76	–	H		15	–	15	–	–	–	35.2	(A-11), (M-10), (M-11)
29	2	REFRIGERATOR, RAPID THAW	A	1749	918	2134	120	1	–	12.9	–	P	NEMA 5-15P	–	–	–	–	–	–	–	
30	2	FLOOR TROUGH W/ GRATE	A	762	762	102	–	–	–	–	–	–		–	–	–	100	–	–	–	(M-5)
31	1	FROZEN FOOD CABINET (PASS-THRU)	A	1473	865	1946	120	1	–	12	–	P	NEMA 5-15P	–	–	–	–	–	–	–	(A-11)
32	3	OVEN	A	1013	1016	2026	208	3	–	60	–	H		–	–	–	–	–	–	70	(A-11), (M-10), (E-6)
32a		NOT USED	–	–	–	–	–	–	–	–	–	–	–	–	–	–	–	–	–	–	
33	2	OPENER, CAN	C	111	203	305	120	1	–	1	–	P	NEMA 5-15P	–	–	–	–	–	–	–	
34	1	MIXING MACHINE, 56.78 LITERS.	A	698	987	1419	208	3	–	10.9	–	H	–	–	–	–	100	–	–	–	
35	1	MIXING MACHINE, 18.93 LITERS.	C	376	618	772	120	1	–	12.8	–	P	NEMA 5-15P	–	–	–	–	–	–	–	
36	1	KETTLE, 151.2 LITERS.	A	1140	1040	1020	208	3	–	100	–	H	–	–	–	–	–	–	–	30.8	(A-11), (M-12)
37		NOT USED	–	–	–	–	–	–	–	–	–	–	–	–	–	–	–	–	–	–	
38	1	KETTLES (TWO) W/ STAND	A	910	840	1486	208	3	–	67	–	H	–	15	–	15	–	50	–	50	(M-6), (M-13)
38a		NOT USED	–	–	–	–	–	–	–	–	–	–	–	–	–	–	–	–	–	–	
39	2	HOOD, EXHAUST	A	REF. MECHANICAL			120	1	–	10	–	H	–	–	25	–	–	–	–	–	(A-7), (E-7), (M-14), (M-16), (M-26), (M-27), (M-36)
39a		NOT USED	–	–	–	–	–	–	–	–	–	–	–	–	–	–	–	–	–	–	
39b		HOOD, LIGHT FIXTURES	A	610	248	152	120	1	–	10	–	H	–	–	–	–	–	–	–	–	
40	1	FLOOR TROUGH W/ GRATE	A	568	750	102	–	–	–	–	–	–	–	–	–	–	–	80	–	–	(M-5)
41	2	FIRE SUPPRESSION SYSTEM	A	–	–	–	–	–	–	–	–	–	–	–	–	–	–	–	–	–	(M-16)
41a		NOT USED	–	–	–	–	–	–	–	–	–	–	–	–	–	–	–	–	–	–	
42	3	FRYER STATION	A	543	883	1161	208	3	–	68	–	H		–	–	–	–	–	–	46.5	(A-11)
43		NOT USED	–	–	–	–	–	–	–	–	–	–	–	–	–	–	–	–	–	–	
44	1	FILTER STA W/FOOD WARMER & LAMP	A	843	933	1161	120	1	1.18	15.2	.25	P	(2)NEMA 5-15P	–	–	–	–	–	–	–	(E-8)
45	2	WATER METERS	A	430	315	300	–	–	–	–	–	–	–	15	–	15	–	–	–	–	(A-7), (M-17)
46	1	TABLE, BAKERS	C	1524	762	902	–	–	–	–	–	–	–	–	–	–	–	–	–	–	
47	1	COOKER, STEAMER	A	1085	894	1545	208	3	–	63.3	–	H	–	–	–	15	–	20	–	60	(A-11), (M-10), (M-18), (M-19)
48	6	HAND SINK (S/S)W/SOAP & TOWEL DISP	A	432	381	127	–	–	–	–	–	–	–	15	–	15	40	–	–	–	(M-20)
49	3	INGREDIENT BIN, MOBILE	C	362	489	699	–	–	–	–	–	–	–	–	–	–	–	–	–	–	
50	1	POT SANITIZER	A	844	914	2551	208	3	–	31&25	–	H	–	–	–	15	–	50	–	–	(A-11), (M-21), (E-10)
50a	1	TABLE, DRAIN BOARD	A	985	900	864	–	–	–	–	–	–	–	–	–	–	–	–	–	–	
50b		NOT USED	–	–	–	–	–	–	–	–	–	–	–	–	–	–	–	–	–	–	
51	1	SINK, POT & PAN	A	6020	914	864	–	–	–	–	–	–	–	–	15	15	40	–	–	–	(A-5), (M-21)
51a	1	HEATER, BOOSTER	A	600	680	900	208	3	–	42	–	H	–	–	20	–	–	–	–	–	
52	2	SPRAY, PRERINSE	A	–	–	–	–	–	–	–	4	H	–	15	–	15	–	50	–	–	(M-6), (M-23)
53	1	HOOD, EXHAUST	A	REF. MECHANICAL			–	–	–	–	–	–	–	–	Varies	–	–	–	–	–	(M-25)
54	1	SINK HEATER, BOOSTER	A	230	440	320	208	3	–	25	–	H	–	–	–	–	25	–	–	–	(M-24)
55	1	HOOD, EXHAUST	A	REF. MECHANICAL			–	–	–	–	–	–	–	–	Varies	–	–	–	–	–	(M-25)
56	4	CART, STORAGE (POT & PAN)	C	1270	660	1727	–	–	–	–	–	–	–	–	–	–	–	–	–	–	
56a	1	RACK, STORAGE FOR MIXER ACCES.	C	1295	686	1629	–	–	–	–	–	–	–	–	–	–	–	–	–	–	
57		NOT USED	–	–	–	–	–	–	–	–	–	–	–	–	–	–	–	–	–	–	
58		NOT USED	–	–	–	–	–	–	–	–	–	–	–	–	–	–	–	–	–	–	
59		NOT USED	–	–	–	–	–	–	–	–	–	–	–	–	–	–	–	–	–	–	
60	1	DISPENSER, BREAD	C	479	584	686	–	–	–	–	–	–	–	–	–	–	–	–	–	–	
61	1	BUTTER DISPENSER	C	305	241	343	–	–	–	–	–	–	–	–	–	–	–	–	–	–	
62	6	DISPENSER, BREAD&BUTTER PLATES	C	406	737	1016	–	–	–	–	–	–	–	–	–	–	–	–	–	–	
63	1	COLD PAN (3) DROP IN	A	1105	610	495	120	1	–	3.9	–	P	NEMA 5-15P	–	–	–	–	–	–	–	
63a	1	SHELF PROTECTOR (LIGHTED)	A	1172	457	457	120	1	0.2	1.5	–	H	–	–	–	–	–	–	–	–	
64		NOT USED	–	–	–	–	–	–	–	–	–	–	–	–	–	–	–	–	–	–	
64a	1	TRAY SLIDE			432	152	–	–	–	–	–	–	–	–	–	–	–	–	–	–	
64b	1	TRAY SLIDE			432	152	–	–	–	–	–	–	–	–	–	–	–	–	–	–	
64c	1	TRAY SLIDE			432	152	–	–	–	–	–	–	–	–	–	–	–	–	–	–	
64d	1	TRAY SLIDE			432	152	–	–	–	–	–	–	–	–	–	–	–	–	–	–	
64e	1	TRAY SLIDE			432	152	–	–	–	–	–	–	–	–	–	–	–	–	–	–	
64f	1	TRAY SLIDE			432	152	–	–	–	–	–	–	–	–	–	–	–	–	–	–	
64g	1	TRAY SLIDE			432	152	–	–	–	–	–	–	–	–	–	–	–	–	–	–	

COMMENTS KEY LIST:

- A-1 SIZE INCLUDES SCALE ON STAND.
- A-2 PROVIDE FIVE (5) SHELVES PER UNIT.
- A-3 EQUIPMENT MOUNTED ON SLAB ON EXTERIOR OF BUILDING.
- A-4 COORDINATE WITH EQUIPMENT ITEM NO. 10a, 10b, 10c, and 10d.
- A-5 CUSTOM FABRICATED UNIT.
- A-6 F.E.S.U. AND M.S.U. AS NOTED IN PLAN SHALL BE 630mm ("x") x 1829mm ("y") x 2188mm ("z").
- A-7 HOOD PANELS (CABINETS) SHALL BE RECESSED PER 11400.
- A-8 ONE UNIT IS A "MIRROR IMAGE" OF THE OTHER. REF. PLAN.
- A-9 PROVIDE SCRAPING TROUGH SLOPED TO EQUIPMENT ITEM NO. 24.
- A-10 CUSTOM FABRICATED UNIT MAY BE MADE IN SECTIONS.
- A-11 REFER TO MANUFACTURER'S CLEARANCE REQUIREMENTS FROM ADJACENT EQUIPMENT AND STRUCTURE.
- A-12 WITH CASTER, MOBILE
- A-13 BUILT-IN INSULATED FLOOR
- A-14 MILLWORK ITEM, SEE ARCHITECTURAL DRAWINGS
- M-1 PROVIDE 15 METER LONG HOSE.
- M-2 PLACE PIPE PENETRATIONS FOR FAUCETS AT 150mm ON CENTER.
- M-3 COORDINATE WITH EQUIPMENT ITEM 51a.
- M-4 INSTALL UNIT ABOVE CEILING.
- M-5 SEE PLUMBING PLANS FOR CONNECTION TO WASTE LINE.
- M-6 PROVIDE VACUUM BREAKERS ON WATER COONECTION OR FAUCET.
- M-7 COORDINATE WITH ITEM 15.
- M-8 PROVIDE WALL MOUNTED CONTROL PANEL WITH DISCONNECT.
- M-9 50mm SLURRY INLET AND RETURN CONNECTIONS.
- M-10 PROVIDE GAS PRESSURE REGULATOR. SET REGULATOR AS REQUIRED BY MANUFACTURER.
- M-11 COORDINATE HOT AND COLD WATER CONNECTIONS WITH FILL FAUCET PROVIDED BY UNIT MANUFACTURER.
- M-12 PROVIDE SWING SPOUT FAUCET.
- M-13 HOT WATER CONNECTION TO FILLER FAUCET AND COLD WATER CONNECTION TO BOILER UNIT.
- M-14 PROVIDE COOPER TUBING FOR WATER AND DETERGENT DELIVERY TO HOOD.
- M-15 PROVIDE A MINIMUM 2 GALLON DETERGENT TANK IN THE HOOD CONTROL PANEL.
- M-16 PROVIDE AN ADDITIONAL MANUAL PULL STATION AS SHOWN ON THE KITCHEN EQUIPMENT PLAN.
- M-17 COORDINATE MOUNTING LOCATION WITH ITEM 36.
- M-18 PROVIDE 8mm CW SUPPLY TO BOILER DRAIN CONDENSER.
- M-19 PROVIDE 15mm CW SUPPLY TO UNIT.
- M-20 PROVIDE CHROME GOOSENECK SPOUT AND 6" CHROME WRIST BLADE HANDLES. ALL OTHER FAUCET CHARACTERISTICS SHALL BE THE SAME AS SPECIFIED FOR P-6 IN SPECIFICATIONS 15400.
- M-21 FOR FINAL RINSE SECTION CONNECT 16mm LINE FROM HOT WATER FAUCET TO BOOSTER HEATER (ITEM N 51a). ALSO INSTALL 50mm DRAIN TO FLOOR SINK.
- M-22 PROVIDE A 20mm LINE FROM THE T & P VALVE TO THE FLOOR SINK.
- M-23 PLACE FAUCETS AT 200mm ON CENTER.
- M-24 50mm INLET AND OUTLET AT SINK REQUIRED. 20mm HOSE CONNECTION TO FLOOR SINK.
- M-25 25mm CONDENSATE DRAIN TO FLOOR SINK.
- M-26 WITH AUTOMATIC WASHDOWN SYSTEM.
- M-27 CUSTOM FABRICATED HOOD.
- M-28 COORDINATE AND VERIFY DRAIN REQUIREMENTS.
- M-29 REQUIRES TWO 20mm DRAIN CONNECTIONS.
- M-30 16mm DRAIN FROM ICE MAKER AND 20mm DRAIN FROM ICE BIN TO FLOOR SINK.
- M-31 UNIT INCLUDES INTERNAL 15KW WATER BOOSTER HEATER.
- M-32 100mm SLURRY INLET AND 80mm RETURN.
- M-33 STAINLESS STEEL DUCT CONNECTING ITEM 104 TO EXHAUST SYSTEM.
- M-34 SEE PLUMBING ITEM P-8.
- M-35 20mm CONDENSATE DRAIN ROUTE TO FLOOR SINK.
- M-36 40mm CONDENSATE DRAIN ROUTE TO FLOOR SINK.

EQUIPMENT CLASSES	NOTES:
A – CONTRATOR FURNISHED, CONTRACTOR INSTALLED C – GOVERNMENT FURNISHED, GOVERNMENT INSTALLED, L – OTHER H ELECTRICAL HARDWARE CONNECTION REQUIRED	P ELECTRICAL PLUG CONNECTION REQUIRED

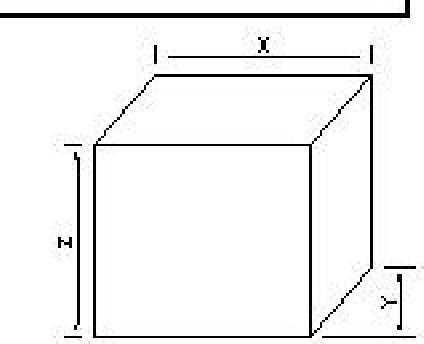

US Army Corps of Engineers Norfolk District

REV. | DATE | BY

DESIGNED SRL | CHECKED AES | DATE OCT.2000 | SCALE AS NOTED
DRAWN | SUBMITTED JSW
PROJECT NO. 9806K | DRAWING NO. | SPECIFICATION NO.
Plot date OCT.2000 | File name

NORFOLK DISTRICT
CORPS OF ENGINEERS
NORFOLK, VIRGINIA

STANDARD DEFINITIVE DESIGN FOR ENL. PERSONNEL DINING FACILITY (150-250 PERSON CAPACITY)

KITCHEN EQUIPMENT SCHEDULE

SHEET K-2 OF