KITCHEN EQUIPMENT SCHEDULE

ITEM	QUANTITY	DESCRIPTION	EQUIPMENT CLASS	SIZE (MILLIMETERS APPROXIMATE) X	Y	Z	ELECTRICAL VOLTS	PHASE	NON-MOTOR KW	TOTAL AMPS	MOTOR KW	CONN	PLUG TYPE	PLUMBING HW 45 C	HW 60 C	CW	WASTE	ID WASTE	GAS	KW	COMMENTS
C1	1	HAND SINK (STAINLESS STEEL)	A	432	384	330	–	–	–	–	–	–		15	–	15	40	–	–	–	(M-20)
C2	3	DUNNAGE SHELVING, MOBILE	C	1220	455	1829	–	–	–	–	–	–		–	–	–	–	–	–	–	
C3		NOT USED		–	–	–	–	–	–	–	–	–		–	–	–	–	–	–	–	
C4	1	WARMER, REACH – IN	A	616	768	2115	120/208	1	–	–	–	–		–	–	–	–	–	–	–	
C5	1	OVERSHELF	A	610	610	254	–	–	–	–	–	–		–	–	–	–	–	–	–	
C6	1	CONVEYOR TOASTER	A	560	360	840	208	1	5	24	–	P		–	–	–	–	–	–	–	
C7	1	TABLE/EQUIPMENT STAND	A	530	743	889	–	–	–	–	–	–		–	–	–	–	–	–	–	
C8	1	EQUIPMENT STAND	A	2896	914	688	–	–	–	–	–	–		–	–	–	–	–	–	–	(A-5)
C9	1	FOOD WARMER	A	305	610	686	120	1	.87	7.3	–	P		–	–	–	–	–	–	–	
C10	1	HOOD, EXHAUST	A	REFER	TO	MECH.	120	1	1.2	10	–	H		–	20	–	40	–	–	–	(A-4), (E-7), (M-14), (M-15), (M-26), (M-27), (M-36)
C11	1	FIRE SUPPESSION SYSTEM	A	–	–	–	–	–	–	–	–	–		–	–	–	–	–	–	–	(M-16)
C12	2	DEEP FAT FRYER	A	312	610	886	–	–	–	–	–	–		–	–	–	–	–	20	16.1	(A-11), (M-10)
C12e	2	DEEP FAT FRYER	A	312	610	886	208	1	–	10.2	49	H									
C13	1	TOP/BOTTOM GRILL	A	1143	770	425	120	–	–	3.5	–	P	NEMA 5–15R	–	–	–	–	–	20	41.9	(A-11), (M-10)
C13e	1	TOP/BOTTOM GRILL	A	1143	770	425	208	1	–	13.4	64	H									
C14	1	UNDERCOUNTER REFRIGERATOR	A	1324	688	483	120	1	–	7.2	0.25	P	NEMA 5–15R	–	–	–	–	–	–	–	
C15	1	MICROWAVE	A	549	503	375	120	1	2.2	18.6	–	P	NEMA 5–20P	–	–	–	–	–	–	–	
C16	1	FRONT COUNTER	A	914	714	914	–	1	–	–	–	–		–	–	–	–	–	–	–	(A-5)
C17	1	SANDWICH REFRIGERATOR	A	698	762	1082	115	1	0.26	8	.19	P	NEMA 5–15R	–	–	–	–	–	–	–	
C17a	1	SERVING UNIT, HEATED (2 WELLS)	A	889	737	914	–	–	–	–	–	–		–	–	–	–	–	–	–	
C18	1	HOT DOG/PIZZA COUNTER	A	1422	889	914	120	1	–	9.6	–	P	UNKNOWN	–	–	–	–	–	–	–	(A-5)
C19	1	HOT DOG ROLLER GRILL	A	584	445	267	–	–	–	–	–	–		–	–	–	–	–	–	–	
C20	1	BREATH PROTECTOR (LIGHTED)	A	1867	318	356	–	–	–	–	–	–		–	–	–	–	–	–	–	(A-5)
C21	1	TRAY DISPENSER	C	361	686	1270	–	–	–	–	–	–		–	–	–	–	–	–	–	
C22	1	DISPLAY REFRIGERATOR	A	1219	610	1384	115	1	0.26	12	.38	P	NEMA 5–20P	–	–	–	–	–	–	–	
C23	1	CUP/LID DISPENSER	A	356	584	635	–	–	–	–	–	–		–	–	–	–	–	–	–	
C24	1	ICE MACHINE/DISPENSER	A	559	711	813	120	1	–	1.9	–	–	NEMA 5–15R	–	–	–	–	20	–	–	(M-29)
C24a	1	SODA DISPENSER	L	406	622	702	120	1	0.28	8.1	.19	P	NEMA 5–15R	–	–	–	–	–	–	–	
C25	1	COFFEE URN (3 GALLON)	A	483	483	737	208	1	7	33.7	–	–	UNKNOWN	–	–	–	–	–	–	–	
C26	1	RACK CONDIMENT RACKS (9BINS)	A	457	533	368	–	–	–	–	–	–		–	–	10	–	–	–	–	
C27	1	BEVERAGE COUNTER W/TROUGH	A	5486	813	914	–	–	–	–	–	–		–	–	–	–	–	–	–	(A-5)
C28	1	WRAPPING STATION	A	3000	610	1524	–	–	–	–	–	–		–	–	–	–	–	–	–	(A-5)
C29	1	OVERSHELF	A	610	457	254	–	–	–	–	–	–		–	–	–	–	–	–	–	
C30	1	REACH–IN REFRIGERATOR	A	1473	711	2108	120	1	–	.37	.38	H		–	–	–	–	–	–	–	
C31	1	REACH–IN FROZEN FOOD CABINET	A	1473	612	2108	120	1	.68	11	.56	P		–	–	–	–	–	–	–	
C32	1	TRAY SLIDE	A	8534	356			–	–	–	–	–		–	–	–	–	–	–	–	(A-5)
C33	1	REFRIGERATOR 25 CU. FT.	A	739	860	2108	120	1						–	–	–	–	–	–	–	
C34	1	POINT OF SALE STATION	A				120	–						–	–	–	–	–	–	–	
C35		NOT USED																			
C36	1	PIZZA WARMER	C	457	508	686	120	1						–	–	–	–	–	–	–	
C37	1	PASTRY DISPLAY	C	787	610	914		1						20	–	20	–	50	20G	75	
C38	2	TRAY SLIDE	A	3000	356			–	–	–	–	–		–	–	–	–	–	–	–	(A-5)

EQUIPMENT SIZE KEY:

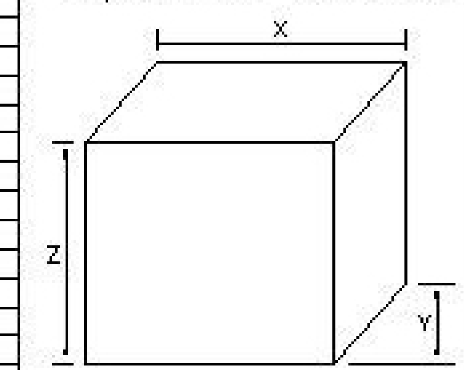

EQUIPMENT CLASSES	NOTES:
A – CONTRATOR FURNISHED, CONTRACTOR INSTALLED	H ELECTRICAL HARDWARE CONNECTION REQUIRED
C – GOVERNMENT FURNISHED, GOVERNMENT INSTALLED,	P ELECTRICAL PLUG CONNECTION REQUIRED
L – OTHER	G PROVIDE EMERGENCY GAS SHUT–OFF FOR ALL GAS APPLIANCES – MAY BE A SINGLE VALVE SERVING ENTIRE KITCHEN INTERFACED WITH FIRE ALARM/EXTING–UISHING SYSTEM

E–1 EVAP UNIT SHALL BE POWERED FROM FREEZER CONDENSING

E–2 102V. CIRCUIT REQUIRED FOR DOOR HEATERS, LIGHTS, AND UNIT.

E–3 120V. CIRCUIT REQUIRED FOR DOOR MAGNETIC DOOR SEAL HEAT TRACE.

E–4 SINGLE POINT POWER CONNECTION TO WALL MOUNTED CONTROL AND LIGHTS.

E–5 PROVIDE ATTACHED DISPOSAL UNIT RATED AT 208V, 1P, 0.75KW. PANEL.

E–6 TWO RECEPTACLES PER OVEN REQUIRED. ONE RECEPTACLE IS

E–7 PROVIDE (2) 120V CIRCUITS FOR CONTROL PANEL. FOR ONE 0.75KW

E–8 PROVIDE 1 ELECTRICAL OUTLET FOR DRAIN STATION AND 1 FOR HEAT LAMP.

E–9 PROVIDE 1 ELECTRICAL OUTLET FOR EACH FRYER, 1 FOR DRAIN STATION, AND 1 FOR HEAT LAMP.

E–10 PROVIDE ONE 208V, 3P CIRCUIT FOR 9KW BOOSTER HEATER, AND ONE 208V, 3P CIRCUIT FOR 4KW MOTOR AND 5KW HEATER, IE TWO CIRCUITS REQUIRED.

E–11 4 WIRES (INCLUDING GROUND) REQUIRED.

E–12 10.7 AMPS SHOWN IS MINIMUM CIRCUIT AMPACITY.

E–13 SINGLE POINT ELECTRICAL CONNECTION.

COMMENTS KEY LIST:

A–1 SIZE INCLUDES SCALE ON STAND.
A–2 PROVIDE FIVE (5) SHELVES PER UNIT.
A–3 EQUIPMENT MOUNTED ON SLAB ON EXTERIOR OF BUILDING.
A–4 COORDINATE WITH EQUIPMENT ITEM NO. 10a, 10b, 10c, and 10d.
A–5 CUSTOM FABRICATED UNIT.
A–6 F.E.S.U. AND M.S.U. AS NOTED IN PLAN SHALL BE 530mm ("x") x 1829mm ("y") x 2185mm ("z").
A–7 HOOD PANELS (CABINETS) SHALL BE RECESSED PER 11400.
A–8 ONE UNIT IS A "MIRROR IMAGE" OF THE OTHER. REF. PLAN.
A–9 PROVIDE SCRAPING TROUGH SLOPED TO EQUIPMENT ITEM NO.24.
A–10 CUSTOM FABRICATED UNIT MAY BE MADE IN SECTIONS.
A–11 REFER TO MANUFACTURER'S CLEARANCE REQUIREMENTS FROM ADJACENT EQUIPMENT AND STRUCTURE.
A–12 WITH CASTER, MOBILE
A–13 BUILT–IN INSULATED FLOOR.
A–14 MILLWORK ITEM, SEE ARCHITECTURAL DRAWINGS

M–1 PROVIDE 15 METER LONG HOSE.
M–2 PLACE PIPE PENETRATIONS FOR FAUCETS AT 150mm ON CENTER.
M–3 COORDINATE WITH EQUIPMENT ITEM 51a.
M–4 INSTALL UNIT ABOVE CEILING.
M–5 SEE PLUMBING PLANS FOR CONNECTION TO WASTE LINE.
M–6 PROVIDE VACUUM BREAKERS ON WATER COONECTION OR FAUCET.
M–7 COORDINATE WITH ITEM 15.
M–8 PROVIDE WALL MOUNTED CONTROL PANEL WITH DISCOUNECT.
M–9 50mm SLURRY INLET AND RETURN CONNECTIONS.
M–10 PROVIDE GAS PRESSURE REGULATOR. SET REGULATOR AS REQUIRED BY MANUFACTURER.
M–11 COORDINATE HOT AND COLD WATER CONNECTIONS WITH FILL FAUCET PROVIDED BY UNIT MANUFACTURER.
M–12 PROVIDE SWING SPOUT FAUCET.
M–13 HOT WATER CONNECTION TO FILLER FAUCET AND COLD WATER CONNECTION TO BOILER UNIT.
M–14 PROVIDE COOPER TUBING FOR WATER AND DETERGENT DELIVERY TO HOOD.
M–15 PROVIDE A MINIMUM 2 GALLON DETERGENT TANK IN THE HOOD CONTROL PANEL.
M–16 PROVIDE AN ADDITIONAL MANUAL PULL STATION AS SHOWN ON THE KITCHEN EQUIPMENT PLAN.
M–17 COORDINATE MOUNTING LOCATION WITH ITEM 36.
M–18 PROVIDE 8mm CW SUPPLY TO BOILER DRAIN CONDENSER.
M–19 PROVIDE 15mm CW SUPPLY TO UNIT.
M–20 PROVIDE CHROME GOOSENECK SPOUT AND 6" CHROME WRIST BLADE HANDLES. ALL OTHER FAUCET CHARACTERISTICS SHALL BE THE SAME AS SPECIFIED FOR P–5 IN SPECIFICATIONS 15400.
M–21 FOR FINAL RINSE SECTION CONNECT 15mm LINE FROM HOT WATER FAUCET TO BOOSTER HEATER (ITEM N 51a). AlSO INSTALL 50mm DRAIN TO FLOOR SINK.
M–22 PROVIDE A 20mm LINE FROM THE T & P VALVE TO THE FLOOR SINK.
M–23 PLACE FAUCETS AT 200mm ON CENTER.
M–24 50mm INLET AND OUTLET AT SINK REQUIRED. 20mm HOSE CONNECTION TO FLOOR SINK.
M–25 25mm CONDENSATE DRAIN TO FLOOR SINK.
M–26 WITH AUTOMATIC WASHDOWN SYSTEM.
M–27 CUSTOM FABRICATED HOOD.
M–28 COORDINATE AND VERIFY DRAIN REQUIREMENTS.
M–29 REQUIRES TWO 20mm DRAIN CONNECTIONS.
M–30 15mm DRAIN FROM ICE MAKER AND 20mm DRAIN FROM ICE BIN TO FLOOR SINK.
M–31 UNIT INCLUDES INTERNAL 15KW WATER BOOSTER HEATER.
M–32 100mm SLURRY INLET AND 80mm RETURN.
M–33 STAINLESS STEEL DUCT CONNECTING ITEM 104 TO EXHAUST SYSTEM.
M–34 SEE PLUMBING ITEM P–8.
M–35 20mm CONDENSATE DRAIN ROUTE TO FLOOR SINK.
M–36 40mm CONDENSATE DRAIN ROUTE TO FLOOR SINK.

US Army Corps of Engineers
Norfolk District

DATE 10.25.1999 | SCALE AS NOTED | CHECKED AES | SUBMITTED JSW | DESIGNED SRGRL | PROJECT NO. 8806C | Plot date 10.24.1999

NORFOLK DISTRICT
CORPS OF ENGINEERS
NORFOLK, VIRGINIA

STANDARD DEFINITIVE DESIGN FOR
ENL. PERSONNEL DINING FACILITY
(501-800 PERSON A LA CARTE)

FOOD SERVICE
EQUIPMENT SCHEDULE III

K–4
SHEET 11 OF 15